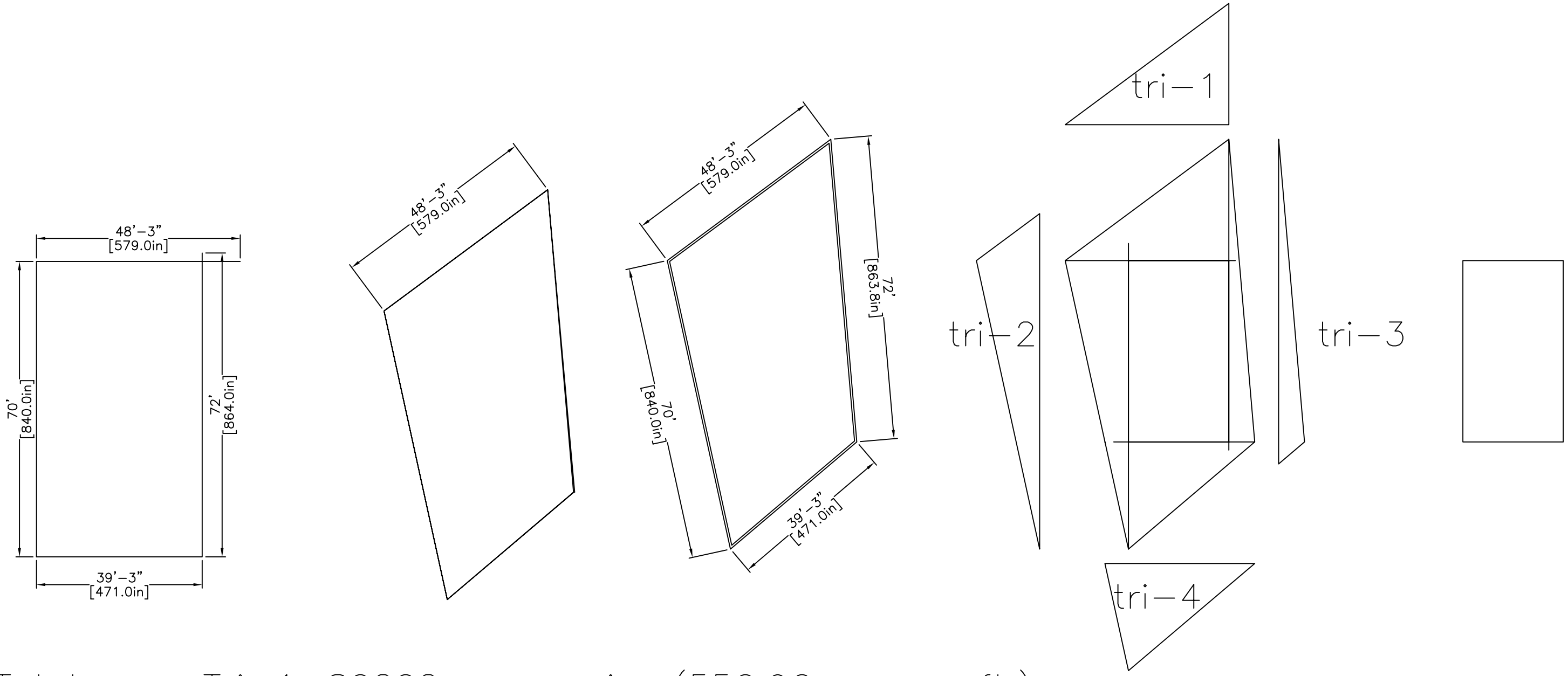

Total area Tri-1=80202 square in. (556.96 square ft.)
Total area Tri-2=85721 square in. (595.28 square ft.)
Total area Tri-3=34025 square in. (236.28 square ft.)
Total area Tri-4=64906 square in. (450.74 square ft.)
Total area Tri-1~4=264854 square in. (556.96 square ft.) when extra 109846.4 ??
Total area of Land=387519 square in. (2691.11 square ft.) 40% 155007.6